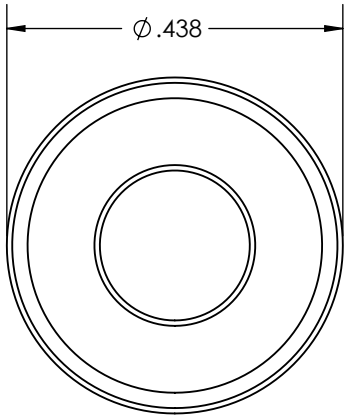

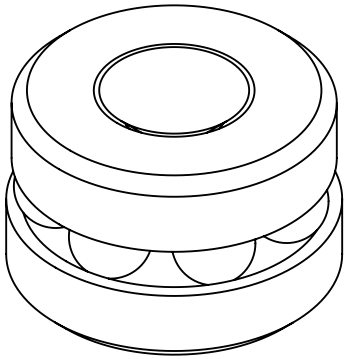

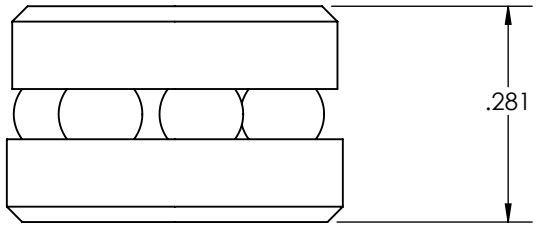

Auburn Bearing

& MANUFACTURING

Made in the USA since 1898

DESCRIPTION: Thrust Bearing, Open Style with Center Rivet

ITEM NUMBER: T-114RG-0007

THE INFORMATION CONTAINED IN THIS DRAWING IS THE SOLE PROPERTY OF AUBURN BALL BEARING. ANY REPRODUCTION IN WHOLE OR IN PART WITHOUT THE WRITTEN PERMISSION OF AUBURN BALL BEARING IS PROHIBITED.